EVERVISION

VBG120607-A(BL)

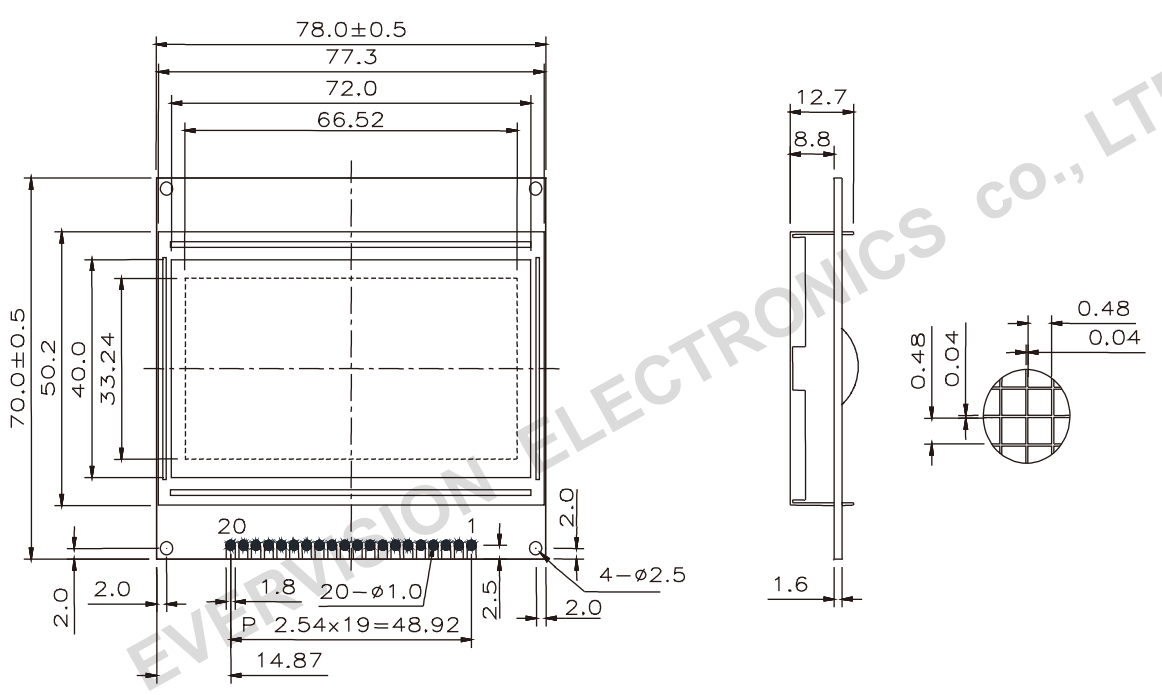

Pin No.	Symbol
1	V_{SS}
2	V_{DD}
3	V0
4	D/I
5	R/W
6	E
7	DB0
8	DB1
9	DB2
10	DB3
11	DB4
12	DB5
13	DB6
14	DB7
15	CS1
16	CS2
17	/RES
18	V_{OUT}
19	A
20	K

EVERVISION ELECTRONICS co., LTD

Feature

1. Controller IC (SBN6400G or Equivalent)
2. +3.0V Power Supply
3. STN-G/Transflective/Positive
4. 8-Bits Parallel(6800)
5. Backlight：LED (Yellow Green)
6. Top：0~50℃；Tst：-20~70℃

W B

MCU

Mechanical Data

Item	Specifications	Unit
Outline Dimension	78.0 x 70.0 x 12.7	mm
Display Format	128 x 64	dot
View Area	72.0 x 40.0	mm
Dot Pitch	0.52 x 0.52	mm

Electrical Characteristics (Operating conditions)

Item	Symbol	Min	Typ	Max	Unit
Voltage for Logic	V_{DD}-V_{SS}	4.5	5.0	5.5	V
Voltage for LCD	V_{EE}-V_{SS}	-4.3	-4.8	-5.2	V
Supply Current	I_{DD}	-	2.0	3.5	mA
	I_{EE}	-	2.4	-	mA

Electrical Characteristics (B/L driving conditions)

Item	Symbol	Min	Typ	Max	Unit
B/L Voltage	V_F	-	4.1	4.6	V
B/L Current	I_F	-	300	-	mA