EVERVISION

VGG804813-A

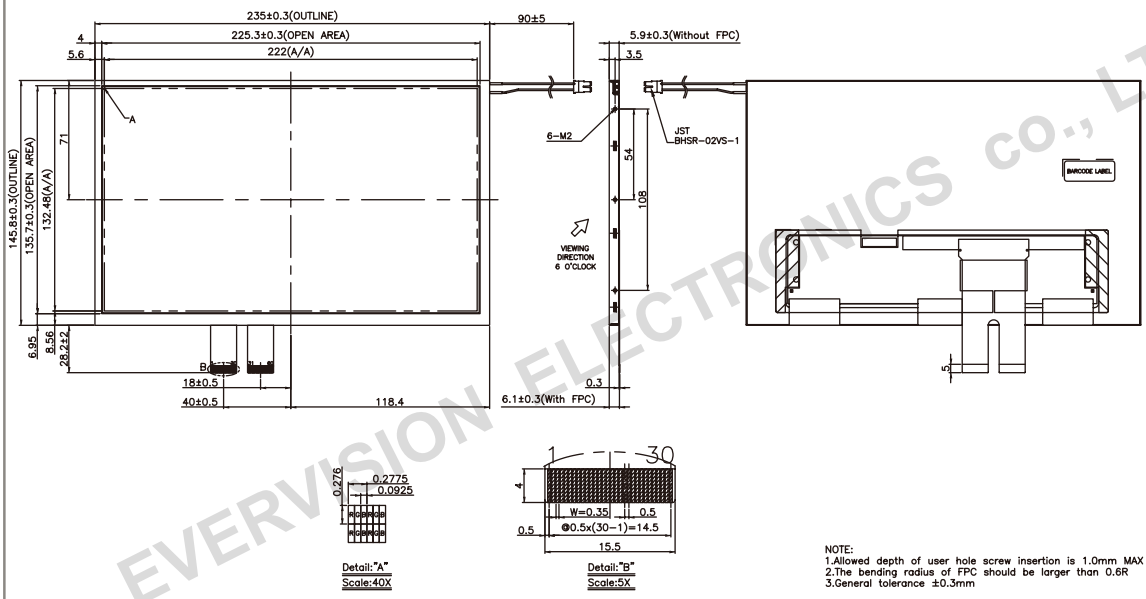

NOTE:
1.Allowed depth of user hole screw insertion is 1.0mm MAX
2.The bending radius of FPC should be larger than 0.6R
3.General tolerance ±0.3mm

Pin No	Symbol	Pin No	Symbol
31	GND	1	POL
32	G5	2	STVD
33	G4	3	OEV
34	G3	4	CKV
35	G2	5	STVU
36	G1	6	GND
37	G0	7	EDGSL
38	STHL	8	VCC
39	REV	9	EDGSL
40	GND	10	VGL
41	DCLK	11	V9
42	VCC	12	VGH
43	STHR	13	V6
44	LD	14	U/D
45	B5	15	VCOM
46	B4	16	GND
47	B3	17	AVDD
48	B2	18	V14
49	B1	19	V11
50	B0	20	V8
51	R/L	21	V5
52	V1	22	V3
53	V4	23	GND
54	V7	24	R5
55	V10	25	R4
56	V12	26	R3
57	V13	27	R2
58	AVDD	28	R1
59	GND	29	R0
60	VCOM	30	GND

EVERVISION ELECTRONICS CO., LTD

Feature

1. 10.2 inches Color TFT
2. View Direction：6 o'clock
3. Interface：TTL RGB
4. Luminance：350 nits (Typ.)
5. Top -30~85°C；Tst -30~85°C

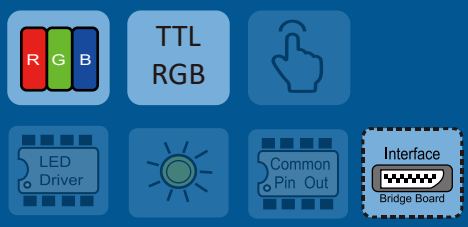

Mechanical Data

Item	Specifications	Unit
Outline Dimension	235.0 x 145.8 x 6.1	mm
Display Format	800RGB x 480	dot
Active Area	222.0 x 132.48	mm
Pixel Pitch	0.2775 x 0.2760	mm

Electrical Characteristics (Operating conditions)

Item	Symbol	Min	Typ	Max	Unit
Digital Voltage	VCC	3.0	3.3	3.6	V
Analog Voltage	AVDD	9.0	9.2	9.4	V
Digital Current	ICC	-	4.0	10.0	mA
Analog Current	IAIDD	-	25.0	50.0	mA

Electrical Characteristics (B/L driving conditions)

Item	Symbol	Min	Typ	Max	Unit
B/L Voltage	VB	8.4	9.3	10.5	V
B/L Current	IB	180	200	220	mA